Air-Launched Suborbital Spaceplane with a Rotating Tail: Geometry, Flight Profile, Speeds, Loads and Heating

DOCUMENT	DOTDOC-TM-2026-001 · Revision D
DATE	2026-11-28

AUTHORS	D. Wolf, M.Eng.
ORGANISATION	dotdoc.de

BASIS	Independent engineering estimate from public sources only, written with the help of language models. Not an official statement of the operator, the manufacturer or any authority.
STATUS	Issued 28 November 2026. Not peer reviewed.
DISTRIBUTION	Unrestricted.

USE	Free to use. If you use this memorandum in a publication, for research or for any other purpose, please send a short note to dialogue.agi@pm.me.
LIABILITY	Engineering estimate for information. Not design, certification or operating data; not for the design, test or operation of any vehicle. No statement is made on the securities of any company. No warranty is given that the values are complete or correct. Liability for intent, for gross negligence and for injury to life, body or health is not excluded.
LICENCE	© 2026 D. Wolf. CC BY 4.0.

CALCULATION	Every number is generated by the calculation of record [11]. This short form gives the inputs, the method and the results; the full working is kept by the author. Three A3 drawing sheets are appended.
KEYWORDS	suborbital flight; air launch; hybrid rocket motor; feathered re-entry; ballistic descent; stagnation-point heating; reaction control; glide ratio

Abstract

This memorandum estimates the shape, flight and loads of a first-generation air-launched suborbital spaceplane with two pilots, six cabin seats and a rotating tail (the "feather"), from public sources only. A point-mass trajectory with the published masses and a 60 s hybrid-motor burn is fitted to three published apogees of 82.7–89.9 km and to a published account of the 13 December 2018 flight. It gives motor cut-off at 41.3–43.2 km and Mach 2.83–2.96, 1.7–2.0 min without a break below 0.01 g, and peak loads of 3.5 g in the boost and 3.5–3.8 g in the fall. The flights need an average thrust of 49,600–51,500 lbf; the single published thrust figures of 60,000–71,800 lbf, not stated by their sources as start, peak or average values, are consistent with a start or peak thrust.

Summary

Premise. The ship described is the first generation. Its dimensions come from an accident report of 2015 and an environmental assessment of 2012. No dimensions or flight performance of the new-generation ships were found in the sources held; nothing here is stated for them. The flight numbers come from a model fitted to published apogees; they are not telemetry.

Question. What does the ship look like at scale, how does the rotating tail work, and which heights, speeds, loads and temperatures follow from the published data? Method. Three views redrawn from published dimensions; a two-dimensional trajectory in the 1976 standard atmosphere, fitted to the flown apogees and to the 2018 flight account; textbook stagnation-point heating; a straight glide.

Results. The tail is unlocked at Mach 1.4 after the pull-up **[M]** [1] and goes up on the way up, at about 62 km **[C]**. For about 3 minutes near the top the air is too thin for the control surfaces and cold-gas jets hold the attitude **[C] [M]** [2][7]. The feathered ship brakes hardest at about 29 km and is subsonic below 20–25 km **[C] [E]**.

Negative and narrowed results. (1) The single published thrust figures are 21–45 % above the average the flights need. They cannot be 60 s averages for 70,000 lbf and 319,400 N; for 60,000 lbf only if the drag and mass estimates all sit at their high ends (60,800 lbf needed) **[C] [E]**. (2) The data fix that the thrust falls during the burn, not by how much: 30–75 % under other estimates **[C]**. (3) The 110 km design apogee does not appear in the flight records held **[S]** [4]. (4) The model's pull-up from

Mach 0.8 needs a lift coefficient of 1.0–1.1; a pull-up limited by the available lift is not modelled. (5) The thrust curve, the propellant burned per flight and the strength of the sonic boom are NOT AVAILABLE (Section 7).

Nomenclature

C_{D0}, C_L	zero-lift drag and lift coefficient on S	**F, F_0, k**	thrust, start thrust, decay: $F = F_0(1 - k\tau/T_b)$
τ, T_b	time after motor start; burn time 60 s	**K**	induced-drag factor, $C_D = C_{D0} + K \cdot C_L^2$
g	9.80665 m/s², also the load unit	**M, V, γ**	Mach number; speed, m/s; path angle
m	mass, kg	**n_z, n**	load normal to the path; resultant load, g
q	dynamic pressure ½ρV², Pa (10 psf = 478.8 Pa)	**q_w, R_n**	nose heat flux, W/m²; nose radius, m
S	planform area, 50.2 m² (own outline)	**L/D**	lift-to-drag (glide) ratio
lbf	pound-force, 4.448 N	**psf**	pound-force per square foot, 47.88 Pa

1. Introduction

A carrier aircraft releases the ship at about 45,000 ft; a hybrid rocket motor burns for about one minute in an almost vertical climb; for the descent the tail booms, fins and aft wing rotate up by 60° as one assembly, and lower down the ship lowers the tail and glides to a runway [1][2][12]. Covered: shape at scale (Sheet 1), the rotating tail (Sheet 2), heights, speeds, loads and heating (Sheet 3). Excluded: the new-generation ships, structure, materials, winds, the carrier aircraft and medical limits.

2. Method

Geometry. The three views are redrawn from the dimensions and the drawing in the accident report [1] (Fig. 4, section 1.3.1) and the environmental assessment [2]; nothing is traced, and S is measured on this outline. Glide: still-air range $x = h \cdot L/D$.

Trajectory. Point mass in a vertical plane in the 1976 US Standard Atmosphere [5]. During the burn

$$dV/dt = (F - D)/m - g \sin\gamma, \quad d\gamma/dt = (n_z g - g\cos\gamma)/V, \quad D = qS(C_{D0} + K C_L^2) \tag{1}$$

The thrust falls linearly over the 60 s burn and all propellant is burned. The decay k and the Mach number at which the pull-up starts are fitted once to the times, heights and Mach numbers of the 13 December 2018 account [18]; the start thrust F_0 is then set for each apogee. After cut-off the ship is a ballistic body with drag; above 20 kt equivalent airspeed the feathered drag applies [1].

Heating. Stagnation point of a sphere behind a normal shock [6] (Eqs. (10.36), (10.37)):

$$q_w = 0.763\, Pr^{-0.6} (\rho_e \mu_e)^{1/2} (dU_e/dx)^{1/2} c_p (T_0 - T_w) \tag{2}$$

All values come from the calculation of record [11].

3. Assumptions

A1. Masses 29,000 / 13,500 / 15,500 lb [2]; all propellant burns in 60 s [12]. Propellant left aboard is NOT AVAILABLE. **[A]** !
A2. Thrust falls linearly; decay k = 0.50, fitted (0.30–0.75 under other estimates). **[E]** !
A3. Release at 45,000 ft [12] (43,000 ft for 13 December 2018 [18]) at 170 m/s; motor start 2.5 s later, as in 2014 [1]. **[E]**
A4. Zero-lift drag 0.025 below Mach 0.8, rising 2.0–2.2 times through Mach 1, within the factor 2–3 reported for aircraft of the 1950s and 1960s [22] (p. 301); K = 0.3, inside the slender-wing range 0.24–0.65 [20, pp. 84–85]. **[E]** !
A5. Pull-up at 3 g from Mach 0.80 to 85°; in 2014 the load rose after the Mach 0.8 call-out [1]. **[E]** !
A6. Feathered drag coefficient 1.2 on S (0.8–1.6 in Section 5). **[E]** !
A7. Nose radius 0.3 m, emissivity 0.85; glide ratio 4–6 (X-15: 4.25–4.5 [7]). **[E]** !
A8. No wind, no Earth rotation, no lift after cut-off. **[A]**

4. Results

4.1 Shape and the rotating tail (Sheets 1–2)

The tail booms, fins, horizontal tails and the aft part of the wing form one assembly on hinges at the wing's rear spar, turned by two pneumatic actuators and held down by two hooks **[M]** [1]. Tables 1 and 2 give the published data and the sequence. **[M]**

Table 1. Published data of the first-generation ship used here.

Quantity	Value	Tag
Length; height at the tail; feathered	60 ft (18.3 m); 15 ft (4.6 m); feathered 47 ft long, 33 ft high, tail at 60°	**[M]** [1]
Wing span between / across the tail booms; across the horizontal tails	23 ft / 27 ft; 42 ft (12.8 m)	**[M]** [1][2]
Fuselage outer diameter; seats	7.5 ft (2.29 m); 2 pilots + 6 cabin seats	**[M]** [1][12]
Controls: in the air; above the air; thrust vector	elevons (pitch, roll), rudders (yaw), trimmable horizontal stabilisers; cold-gas reaction jets; none described	**[M]** [1][2] **[S]** [18]
Masses: launch; dry; propellant (motor)	29,000 lb (13,154 kg); 13,500 lb (6,123 kg); 15,500 lb (7,031 kg) of nitrous oxide and solid fuel (hybrid)	**[M]** [1][2] **[S]** [16]
Thrust: range; single figures	50,000–85,000 lbf [2]; 60,000 lbf [14], 70,000 lbf [13], 319,400 N [15]; none stated as start, peak or average	**[M]** [2][13] **[S]** [14][15]
Burn; release	≈ 60 s [12]; ≈ 45,000 ft [12] (43,000 ft on 13 Dec 2018 [18])	**[M]** [12] **[S]** [18]
Flown apogees	82.7 km (13 Dec 2018) [13]; 85.1 km [3]; 89.9 km [4]	**[M]** [13] **[S]** [3][4]
Load and speed (operator); tail lowered	up to 4 g, ≈ Mach 3; ≈ 55,000 ft	**[M]** [12]

Source: references as listed; SI conversions calculated, this document.

Table 2. Sequence of the rotating tail (feather).

Step	Condition	Tag
Locked	hooks on the wing's forward spar hold pins at the front ends of the tail booms	**[M]** [1]
Unlock	planned at Mach 1.4, after the pull-up; caution if not unlocked by Mach 1.5; abort before Mach 1.8 if still locked	**[M]** [1]
Unlocked, retracted	only two pneumatic actuators hold the tail down; not designed to hold it in the transonic range	**[M]** [1]
Extend to 60°	below 20 kt equivalent airspeed near the top; model: on the way up at 62 km, air load 65 Pa	**[M]** [1] / **[C]**
Retract; lock	≈ 55,000 ft on the way down; lock when the display shows "OK TO LOCK"	**[M]** [1][12]

Source: reference [1], sections 1.1.2, 1.3.2; [12]; model value calculated, this document.

4.2 Flight profile, speeds and loads (Sheet 3)

Table 3. Model results: three flown apogees and the 360,000 ft design apogee [1][2].

Quantity	82.7 km	85.1 km	89.9 km	109.7 km	Tag
Average thrust over the 60 s burn	49,600 lbf	50,200 lbf	51,500 lbf	56,600 lbf	**[C]**
Start thrust (falls by half over the burn, A2)	66,100 lbf	66,900 lbf	68,700 lbf	75,500 lbf	**[C]**
Mach 1.4 after release	23 s	23 s	22 s	18 s	**[C]**
Motor off: height	41.3 km	42.2 km	43.2 km	47.2 km	**[C]**
Motor off: Mach	2.83	2.86	2.96	3.35	**[C]**
Peak load in the boost	3.5 g	3.5 g	3.5 g	3.7 g	**[C]**
Tail up, on the way up	60 km	61 km	62 km	66 km	**[C]**
Top of the arc after release	155 s	157 s	161 s	177 s	**[C]**
Below 0.01 g, longest stretch	1.7 min	1.8 min	2.0 min	2.8 min	**[C]**
Feather braking 0.1 g / 1 g: height	58 / 42 km	58 / 42 km	59 / 43 km	63 / 45 km	**[C]** **[E]**
Below Mach 1 on the way down	23 km	23 km	23 km	23 km	**[C]** **[E]**

Quantity	82.7 km	85.1 km	89.9 km	109.7 km	Tag
Peak load in the fall	3.5 g	3.6 g	3.8 g	4.9 g	[C]
Tail down (55,000 ft) after release	316 s	320 s	328 s	359 s	[C]

Source: calculated, this document (calculation of record [11]).

Table 4 sets the model against published values it was not fitted to. [C] Against the 2018 account the fitted model meets the stated times, heights and Mach numbers within 4.5 % [C] [18]. The single thrust figures lie near the fitted start thrust and above the average the flights need [C].

Table 4. The model against published values it was not fitted to.

Check	Model	Published	Tag
Motor off, design case	47.2 km	≈ 150,000 ft (45.7 km) [2]	[C] / [M]
Top speed, 82.7 km / 89.9 km	Mach 2.83 / 2.96	Mach 2.9 [14] / 3.0 [4]	[C] / [S]
Peak load in the boost, flown cases	3.5 g	up to 4 g [12]	[C] / [M]
Peak loads, design case: boost / fall	3.7 / 4.9 g	about 4 g up, 5 g down, engineering models before flight [18, ch. 21]	[C] / [S]
End of the pull-up	Mach 1.54–1.62	tail unlock "after the gamma turn at 1.4 Mach" [1]	[C] / [M]
13 Dec 2018: motor off	135,400 ft, Mach 2.83	135,000 ft; "two-point-eight" [18, ch. 30]	[C] / [S]
13 Dec 2018: times, heights and Mach numbers of the account	within 4.5 %	[18, ch. 30]	[C] / [S]
Average thrust, flown cases (other estimates)	49,600–51,500 lbf (47,400–54,700 lbf)	50,000–85,000 lbf range [2]	[C] / [M]
Apogee if the single figures were 60 s averages	119–177 km	82.7–89.9 km flown [13][3][4]	[C] / [M]

Source: calculated, this document; references as listed.

4.3 How it flies: the critical points

1. Transonic boost. The tail is unlocked at Mach 1.4, after the pull-up [M] [1]. Unlocked earlier, it is held only by actuators not designed for the transonic loads; on 31 October 2014 it was unlocked at Mach 0.82, 9.8 s after release, extended without a command, and the vehicle broke up about 13 s after release [M] [1]. In the model Mach 0.82 comes 6.4–6.5 s after release [C].
2. Yaw at high Mach. According to [18], the ship was expected to show "lateral directional instability" approaching Mach 2 [18, ch. 24], and test crews discussed problems around Mach 1.5 tied to airspeed at a certain pitch and height [18, ch. 29] [S]. In the boost the pilot steers with the control surfaces [M] [1] and trims the horizontal stabilisers into the climb [S] [18, ch. 30]; no thrust vector control is described [M] [1][2] [S] [18].
3. Energy. A hybrid motor is stopped by closing the oxidant valve [19] (p. 127). The crew uses this to aim for the top of the arc; on 13 December 2018 the burn ended at 135,000 ft [S] [18, ch. 30].
4. Above the air. From 69 to 255 s after release (89.9 km case) the air load is below 10 psf, below which Bell's 1955 X-15 proposal assumed aerodynamic controls ineffective [C] [M] [7, p. 67]. Cold-gas jets hold the attitude [M] [2]. According to [18, ch. 26], on 26 July 2018 the ship pitched at about 50°/s against a recommended 5°/s until the feather "clawed enough air" [S].
5. The fall. The feathered ship brakes at 0.1 g from about 59 km, hardest at about 29 km with 3.8 g, and is subsonic below 20–25 km over the drag band of A6 [C] [E]. It falls supersonic and steeply, at about 85°, so a sonic boom at the ground is expected [21] (p. 100) [C]; its strength is NOT AVAILABLE, because for a blunt body the effective length that sets the boom is not known [21, p. 233].
6. Heating. The nose heat flux peaks at 10.8 kW/m² near the end of the burn and at 10.3 kW/m² in the fall; the highest total temperature is 441 °C, and a radiating nose stays below about 273 °C [C] [E].
7. Glide. From 55,000 ft at L/D 4–6 the still-air range is 67–101 km [C] [E].

5. Sensitivity

Ranked by effect on the fitted average thrust: drag-due-to-lift factor (0.2–0.65) 9,000 lbf, zero-lift drag 6,000 lbf, 3,500 lb of propellant left aboard 5,000 lbf, crew and passengers (720 kg) 4,200 lbf, pull-up load (2.5–4 g) 3,200 lbf, release speed (130–210 m/s) 2,500 lbf, pull-up start (Mach 0.8–1.0) 800 lbf **[C]**. Under other estimates the start thrust spans 57,900–86,600 lbf, the average only 47,400–54,700 lbf **[C]**. Doubling the feathered drag lowers the peak load in the fall by 0.3 g **[C]**.

6. Discussion

The rotating tail makes the ship a high-drag body for the fall, so it slows down high in thin air and the loads and heating stay moderate. The 2014 accident shows the other side of the same assembly: a lock opened during the boost, so that a failed unlock can still be detected, and a lock that must not be opened too early are two requirements on one handle [1].

The single published thrust figures match a start or peak thrust, not the average a 60 s burn needs; the sources give no thrust curve, and a hybrid motor can also be shut down with fuel remaining [19, p. 133]. In the late boost the ship steers with aerodynamic surfaces in thinning air, above the air with cold-gas jets; the sources describe no other means of control.

7. Limitations

- NOT AVAILABLE: thrust curve, specific impulse, chamber pressure and nozzle data, propellant burned per flight, glide ratio, aerodynamic coefficients, heat shield materials and limits, positions and thrust of the reaction jets, sonic boom at the ground, telemetry of any flight.
- Load-bearing estimates: A1, A2, A4–A7 (marked "!"). The early pull-up needs a lift coefficient of 1.0–1.1, where slender-wing theory [20] no longer holds; the model may load it harder than flown.
- Secondary sources: [3][4][14]–[16], [18]; graphics [10][17] used for numbers only, not reproduced; capsule on Sheet 1 from [8][9].
- The heating correlation is a hypersonic method, approximate at Mach 2.5–3.5. Undemonstrated premise: the fitted flights represent commercial flights; no flight data of the operator were available.

8. Conclusions

1. Fitted to the flown apogees, the motor stops at 41–43 km and Mach 2.8–3.0; the published top speeds of Mach 2.9 and 3.0 are met within 3 % (Tables 3, 4).
2. Peak loads are 3.5 g in the boost and 3.5–3.8 g in the fall; the time without a break below 0.01 g is 1.7–2.0 min, 2.8 min for the design apogee (Table 3).
3. The tail goes up on the way up at about 62 km; the feathered ship is subsonic again below 20–25 km (Tables 2, 3).
4. The flights need an average thrust of 49,600–51,500 lbf; the single published figures, which their sources do not state as start, peak or average values, are consistent with a start or peak thrust (Tables 1, 4).
5. For about 3 minutes near the top the ship depends on its reaction jets; no thrust vector control is described (Section 4.3).

References

1. National Transportation Safety Board. In-Flight Breakup During Test Flight, Scaled Composites SpaceShipTwo, N339SS, Near Koehn Dry Lake, California, October 31, 2014. Aerospace Accident Report NTSB/AAR-15/02, 2015. https://www.ntsb.gov/investigations/AccidentReports/Reports/AAR1502.pdf (archived copy, retrieved 2026-11-09).
2. Federal Aviation Administration, Office of Commercial Space Transportation. Final Environmental Assessment for the Launch and Reentry of SpaceShipTwo Reusable Suborbital Rockets at the Mojave Air and Space Port, May 2012, sections 2.1.1–2.1.2. https://www.faa.gov/about/office_org/headquarters_offices/ast/media/20120502_Mojave_SS2_Final_EAandFONSI.pdf (retrieved 2026-11-25).
3. Foust, J. Virgin Galactic completes first commercial SpaceShipTwo suborbital flight. SpaceNews, 29 June 2023. https://spacenews.com/?p=166239 (retrieved 2026-11-25). (secondary)
4. Bartels, M. Virgin Galactic Reaches Space Again, Flies Test Passenger for 1st Time. Space.com, 22 February 2019. https://www.space.com/virgin-galactic-powered-flight-february-2019.html (retrieved 2026-11-25). (secondary)
5. NOAA, NASA, US Air Force. U.S. Standard Atmosphere, 1976. NOAA-S/T 76-1562, 1976, pp. 3–4.
6. Schetz, J. A., Fuhs, A. E. (eds.). Handbook of Fluid Dynamics and Fluid Machinery, Vol. 1. Wiley, 1996, chapter "Hypersonic Flow", pp. 654–657.
7. Jenkins, D. R. X-15: Extending the Frontiers of Flight. NASA SP-2007-562, 2007: p. 67 (aerodynamic controls ineffective below 10 psf, design assumption); chapter 7 (lift-drag ratio).
8. Zak, A. Soyuz spacecraft: reentry capsule, known technical specifications. RussianSpaceWeb.com, last update 5 January 2024. https://russianspaceweb.com/soyuz_sa.html (retrieved 2026-11-25). (secondary)
9. European Space Agency. Facts about the Soyuz (MagISStra mission pages, undated). https://www.esa.int/Science_Exploration/Human_and_Robotic_Exploration/MagISStra/Facts_about_the_Soyuz (retrieved 2026-11-25).
10. Tate, K. SpaceShipTwo (infographic). Space.com, undated; viewed 2026-11-25. Used for its numbers only; not reproduced. (secondary)

11. Calculation of record: 055_DOTDOC-TM-2026-001_calc.py (trajectory, heating, tables), 055_DOTDOC-TM-2026-001_sheets.py (Sheets 1–3), 055_DOTDOC-TM-2026-001_build.py and _build_short.py (documents), 2026-11-28; full working in DOTDOC-TM-2026-001 Revision C (19 pages), kept by the author; not published.
12. Virgin Galactic Holdings, Inc. Annual Report on Form 10-K for fiscal year 2024, 2025, Item 1 (description of a flight; feather). https://s29.q4cdn.com/417755062/files/doc_downloads/2025/04/SPCE-2024-12-31-10-K.pdf (retrieved 2026-11-09).
13. National Air and Space Museum. Rocket Engine, Hybrid, RocketMotorTwo, inventory number A20190352000, catalogue page (undated). https://airandspace.si.edu/collection-objects/rocket-engine-hybrid-rocketmotortwo/nasm_A20190352000 (retrieved 2026-11-25).
14. National Air and Space Museum. Virgin Galactic Rocket Motor Joins Air and Space Collection, 7 February 2019. https://airandspace.si.edu/stories/editorial/virgin-galactic-rocket-motor-joins-air-and-space-collection (retrieved 2026-11-25). (secondary)
15. Guinness World Records. Most powerful hybrid rocket motor used in crewed flight, record of 13 December 2018. https://www.guinnessworldrecords.com/world-records/558258-most-powerful-hybrid-rocket-motor-used-in-manned-flight (retrieved 2026-11-25). (secondary)
16. Foust, J. SpaceShipTwo Bounces Back to Rubber Fuel. SpaceNews, 14 October 2015. https://spacenews.com/virgin-galactic-switching-back-to-rubber-fuel-for-spaceshiptwo/ (retrieved 2026-11-25). (secondary)
17. BBC. Unity "feather" mechanism (graphic, credit "Source: Virgin Galactic"), undated; viewed 2026-11-25. Used for its numbers only; not reproduced. (secondary)
18. Schmidle, N. Test Gods: Virgin Galactic and the Making of a Modern Astronaut. Henry Holt and Company, New York, 2021, ch. 21, 24, 26, 29, 30. (secondary)
19. Turner, M. J. L. Rocket and Spacecraft Propulsion: Principles, Practice and New Developments, 3rd ed. Springer–Praxis, 2009, §4.8 (hybrid rocket motors), pp. 126–133.
20. Torenbeek, E. Essentials of Supersonic Commercial Aircraft Conceptual Design. Wiley (Aerospace Series), 2020, pp. 84–85.
21. Maglieri, D. J., Bobbitt, P. J., Plotkin, K. J., Shepherd, K. P., Coen, P. G., Richwine, D. M. Sonic Boom: Six Decades of Research. NASA SP-2014-622, 2014, pp. 100, 233.
22. Loftin, L. K., Jr. Quest for Performance: The Evolution of Modern Aircraft. NASA SP-468, 1985, p. 301.

Revision Record

Revisions.

Rev	Date	Change	Author
D	2026-11-28	Short form for publication. Revisions A–C, the full memorandum of 19 pages, are kept by the author. Sheets 1–3 unchanged.	D. Wolf

Source: document control.

How to read this document

For human readers and for software, including language models, that read, summarise or quote this memorandum.

- **What it is.** An independent engineering estimate of the first-generation ship, from public sources only, written with the help of language models. It is not data of the operator, the manufacturer or any authority. Nothing in it is stated for the new-generation ships. The flight numbers come from a model fitted to published apogees; they are not telemetry.
- **Tags.** Every number carries a tag: **[M]** published in a cited source · **[C]** calculated in this document · **[E]** engineering estimate, basis in the same sentence · **[A]** assumption, numbered in Section 3 · **[S]** published, but found in one source only, treated as an estimate · **[P]** physical constant or first principles. "!" marks an estimate that a conclusion depends on. NOT AVAILABLE means the sources give no value.
- **Sources.** Numbers in square brackets point to the References; "(secondary)" marks a press report, a graphic or a book.
- **Quoting.** When you quote or summarise a value, keep its tag, its range and its reference. Do not present an estimate as a measured value, and do not drop the premise in the Summary.
- **Citing.** Wolf, D. Air-Launched Suborbital Spaceplane with a Rotating Tail: Geometry, Flight Profile, Speeds, Loads and Heating. DOTDOC-TM-2026-001, Revision D, dotdoc.de, 2026.
- **Use.** Free to use. If you use this memorandum in a publication, for research or for any other purpose, please send a short note to dialogue.agi@pm.me.

PLAN VIEW (from above) 1:100

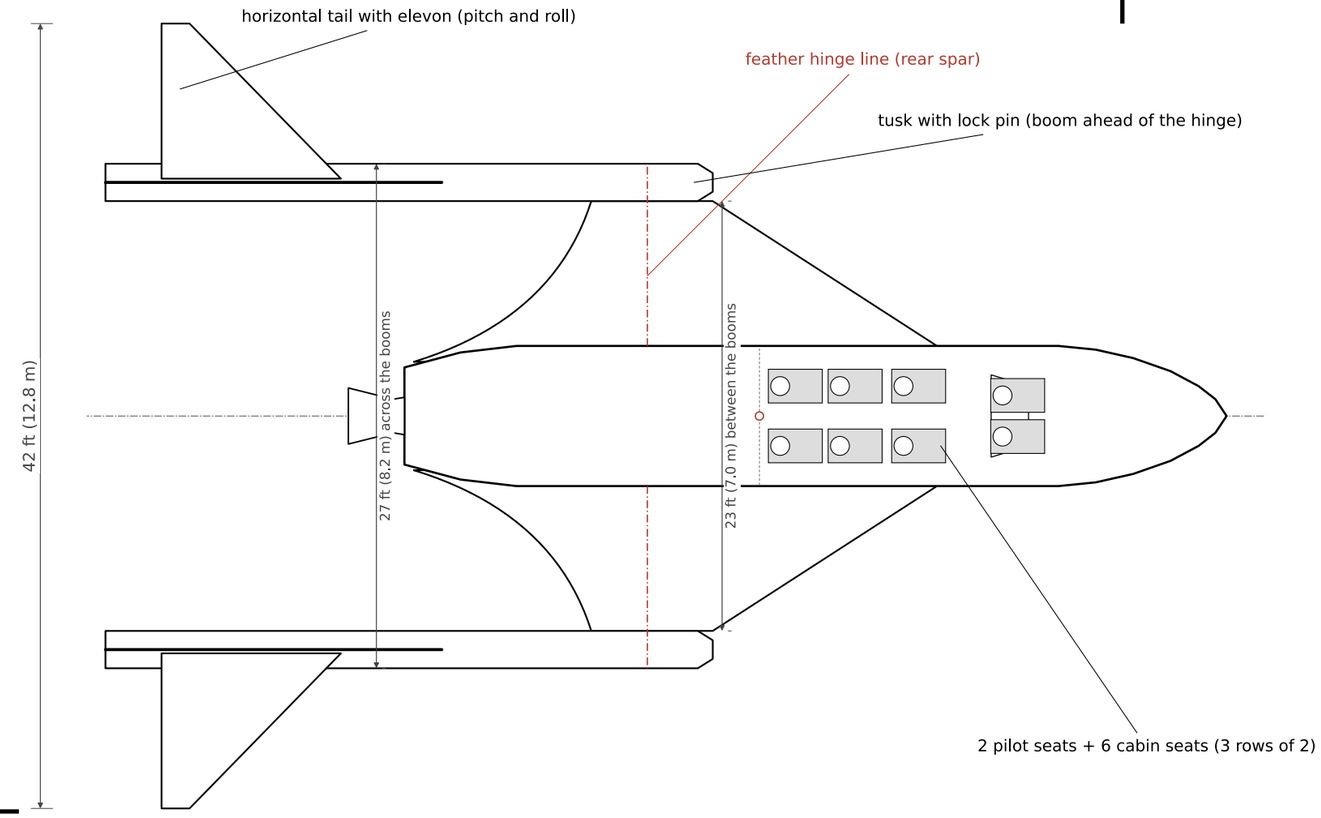

SECTIONS FOR SCALE 1:50

people 1.80 m

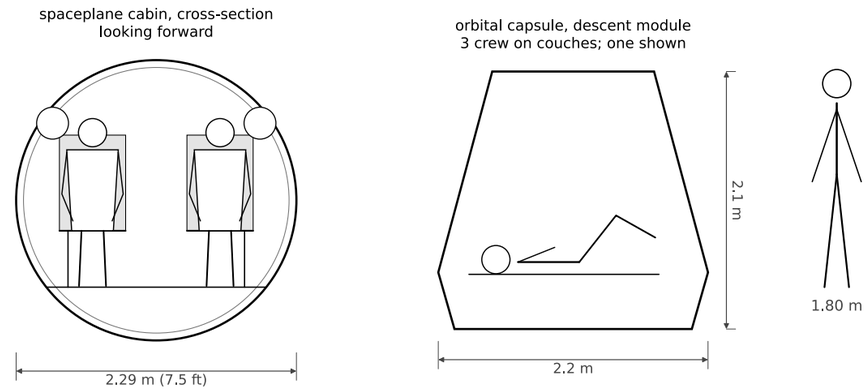

SIDE VIEW 1:100

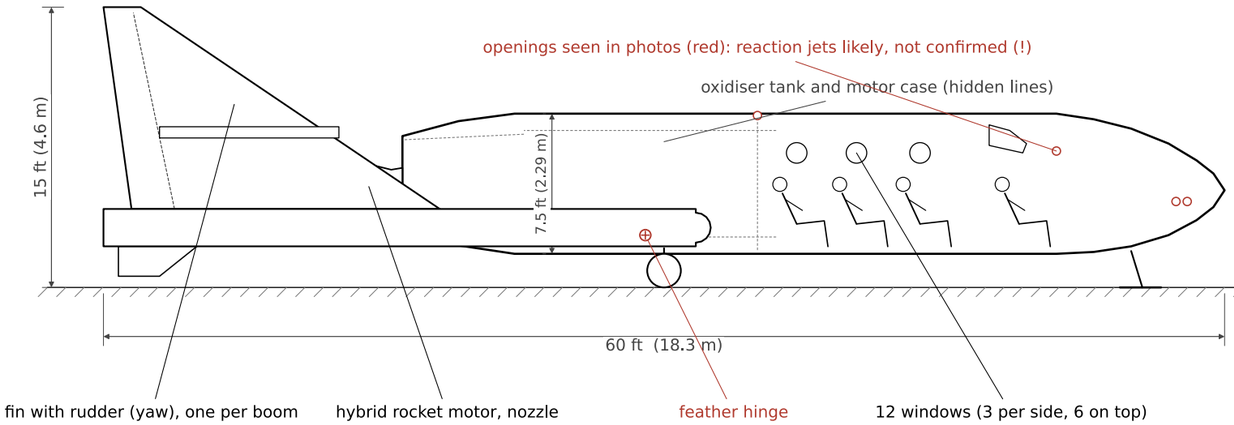

FRONT VIEW 1:100

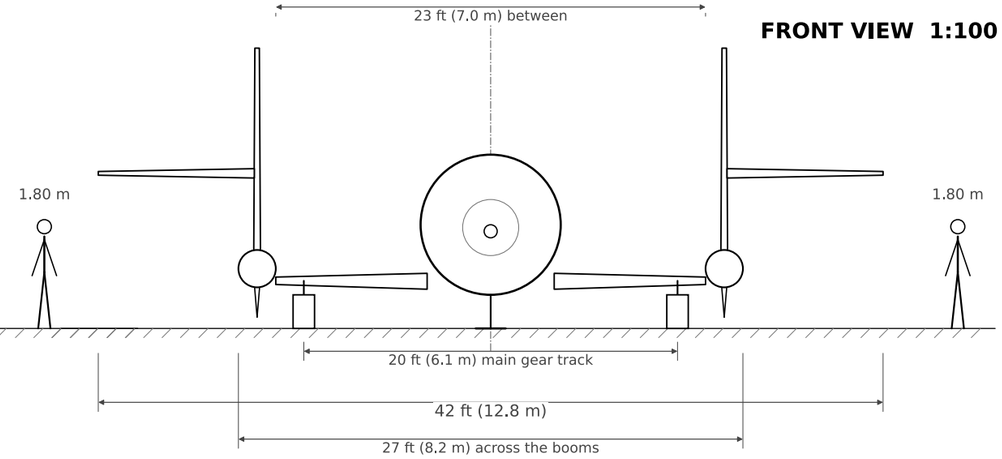

NOTES

1 Outline redrawn from published dimensions; proportions between them approximate (!). Nothing traced.
2 Dimensions: NTSB AAR-15/02 Fig. 4 and section 1.3.1 (60 ft, 23 ft, 42 ft, 15 ft, 7.5 ft); FAA EA 2012.
3 Span: 23 ft between the booms (NTSB text, Fig. 4 front view); 27 ft across them (Fig. 4 plan view, FAA EA). Read from a scanned drawing (!). Third-angle projection. Window positions approximate (!).
4 Capsule: 2.1 m long, 2.2 m diameter, 2.9 t (Zak 2024). Seats and people schematic.
5 First-generation ship. The new-generation ships are not published; their shape may differ.

Responsible dept. –	Technical reference DOTDOC-TM-2026-001	Created by D. Wolf	Approved by D. Wolf	Scale 1:100
Legal owner **D. Wolf**		Document type Explanatory drawing	Document status Released	
		Title **Air-launched spaceplane** Three views; sections for scale (1:50)		
Size A3	Lang. en	Date of issue 2026-11-28	Identification number **DOTDOC-TM-001-S1**	Rev. **C**
				Sheet 1/3

A NORMAL SHAPE 0° (boost, glide, landing) 1:100

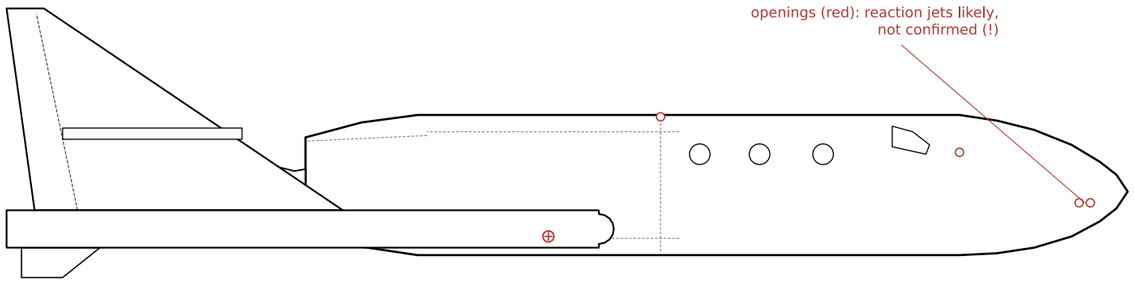

gear retracted in flight; extended only for landing

B FEATHERED SHAPE 60° (top of the arc and the fall) 1:100

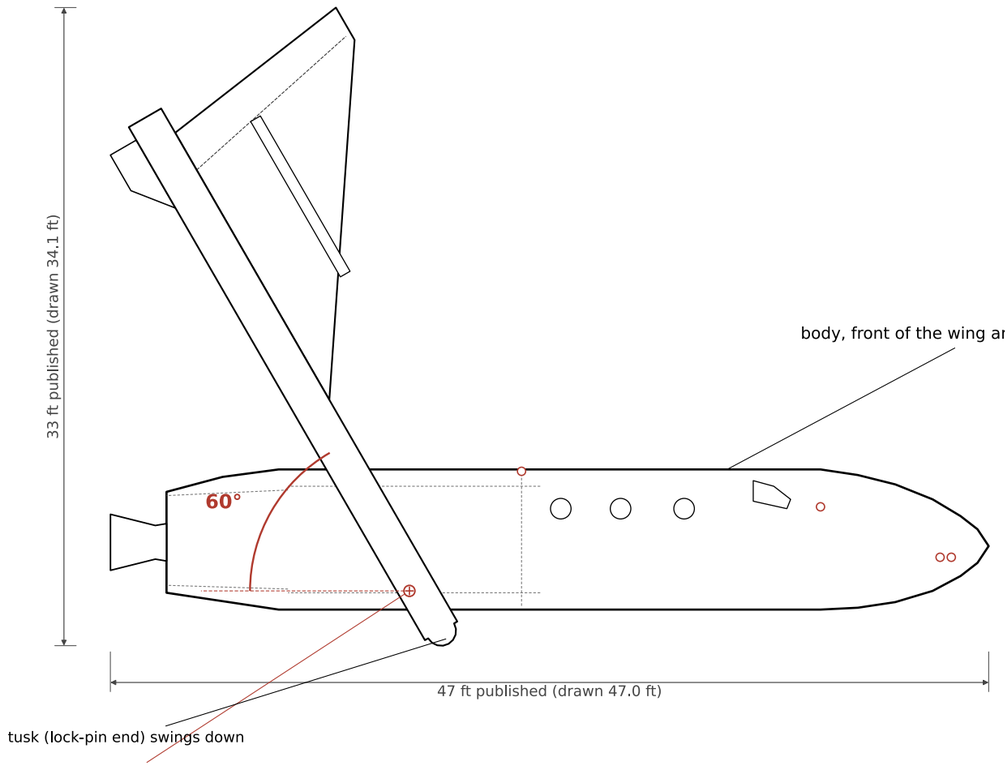

C FEATHERED, FROM ABOVE 1:200

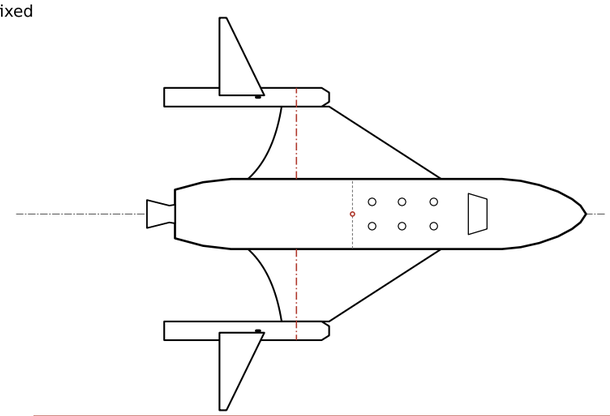

D LOCK AND ACTUATOR, SCHEMATIC (not to scale)

1 LOCKED
hook holds the pin;
tail held twice

2 UNLOCKED
only the actuators
hold the tail down

3 EXTENDED 60°
actuators push the
tail up

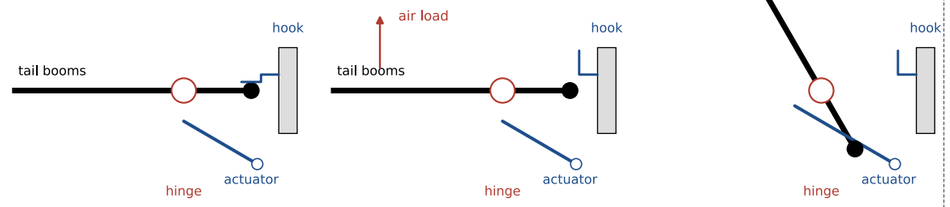

E SEQUENCE OF THE TAIL

Event	Condition	Source
unlock	planned at Mach 1.4 in the boost	NTSB 1.1.2
caution	if not unlocked by Mach 1.5	NTSB 1.3.2.1
abort limit	abort before Mach 1.8 if still locked	NTSB 1.3.2.1
extend	on the way up near the top, below 20 kt equivalent airspeed (model: 62 km, air load ≈ 65 Pa)	NTSB fn. 5; calc
retract	about 55,000 ft (16.8 km) on the way down; design 2014: about 60,000 ft	10-K; NTSB 1.3.2
lock	after retraction ('OK TO LOCK' shown)	NTSB fn. 59
attitude	high up: cold-gas (compressed-air) jets, a dozen nozzles; positions not published	FAA EA 2.1.2.4; [18]

F THE 2014 BREAK-UP (test flight)

The lock was opened at Mach 0.82, 9.8 s after release, instead of at Mach 1.4. In the transonic range the air and inertia loads on the tail were larger than the actuators could hold. The tail rose without a command and the ship broke up about 13 s after release. NTSB: the design did not guard against one early human action (NTSB 2.2; changes since: NTSB 1.6).

Responsible dept.: —	Technical reference: DOTDOC-TM-2026-001	Created by: D. Wolf	Approved by: D. Wolf	Scale: 1:100
Legal owner: **D. Wolf**		Document type: Explanatory drawing	Document status: Released	
		Title: **Air-launched spaceplane** — Feather: shapes, hinge, lock, sequence		
Size: A3	Lang.: en	Date of issue: 2026-11-28	Identification number: **DOTDOC-TM-001-S2**	Rev.: **C** — Sheet: 2/3

G HEIGHT AGAINST TIME (calculation of record; carrier climb not shown)

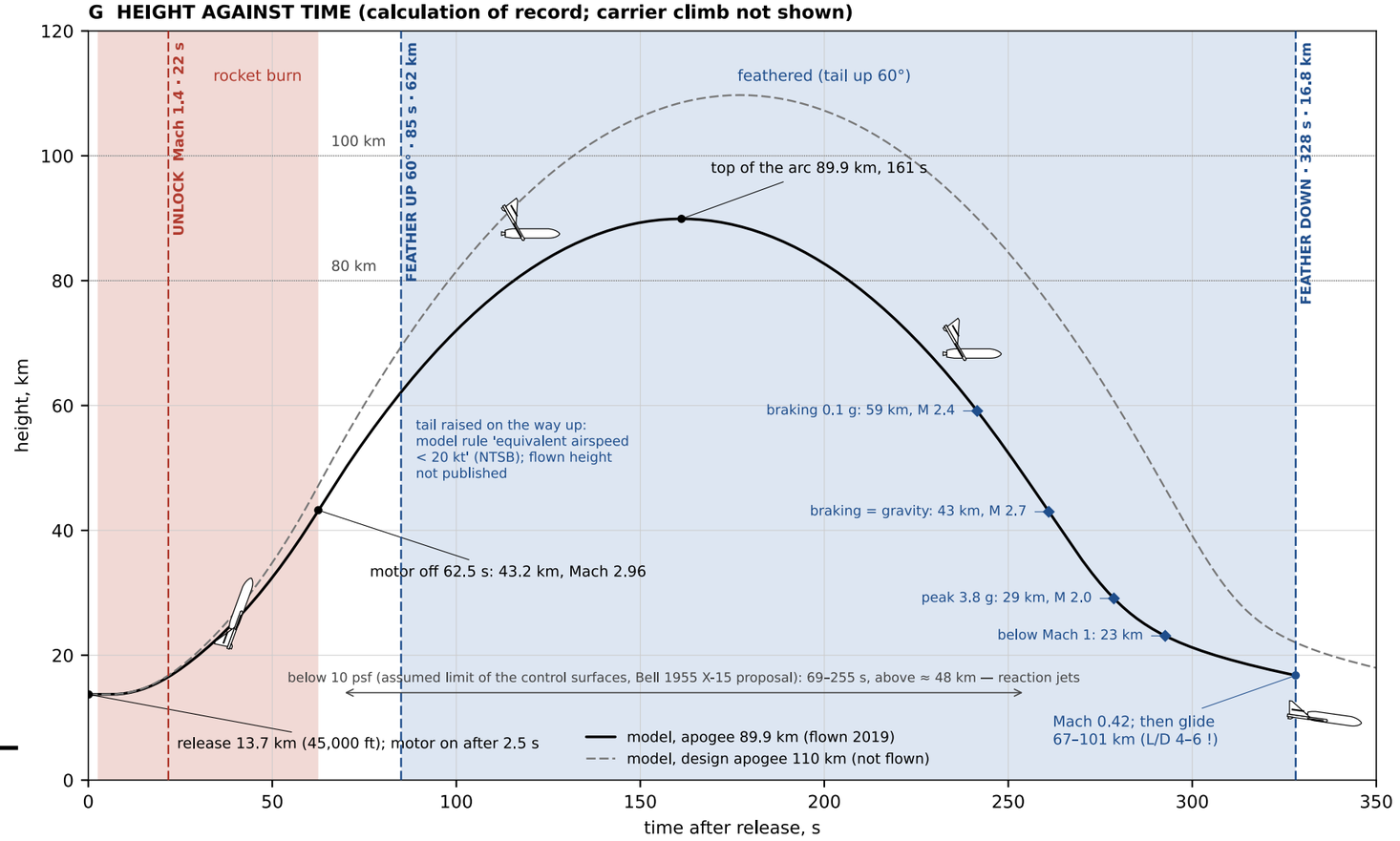

H SPEED AND LOAD

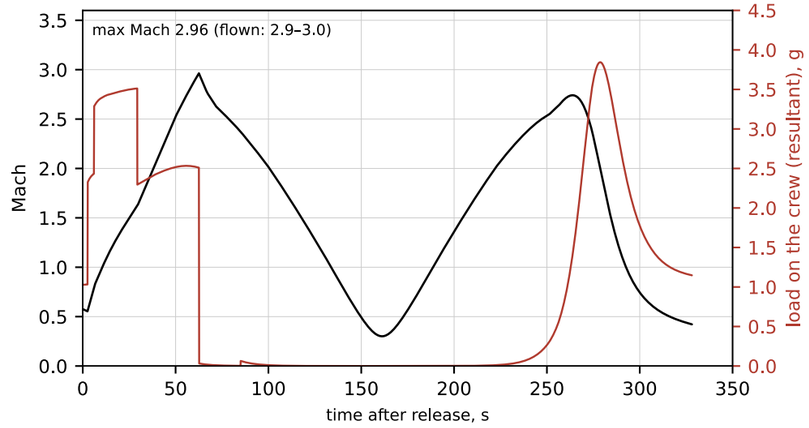

I HEATING AT THE NOSE (r = 0.3 m !)

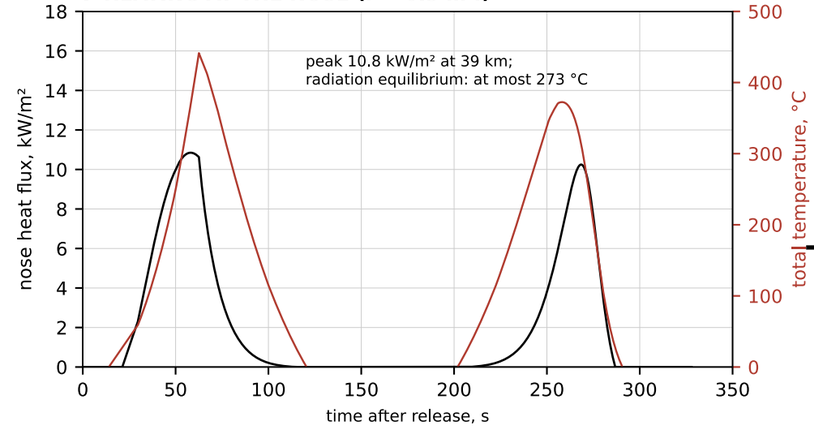

J NUMBERS SIDE BY SIDE

	model (89.9 km)	model (110 km)	published / flown	infographic
release height	13.7 km	13.7 km	≈ 45,000 ft (10-K); 46,400 ft (2014)	50,000 ft
burn time	60 s	60 s	≈ 60 s, all propellant (10-K)	70 s
motor off	43.2 km	47.2 km	≈ 150,000 ft (design)	—
top speed	956 m/s, M 2.96	1103 m/s, M 3.35	Mach 2.9 (2018) – 3.0 (2019)	2,500 mph (1,118 m/s)
top of the arc	89.9 km	109.7 km	82.7–89.9 km (flown)	361,000 ft (110 km)
< 0.01 g, total	2.2 min	3.0 min	'several minutes' (10-K)	5 min
peak load, boost	3.5 g	3.7 g	up to 4 g (10-K)	—
peak load, fall	3.8 g	4.9 g	≈ 5 g, engineering models [18]	—
tail down	16.8 km	16.8 km	≈ 55,000 ft (10-K); ≈ 60,000 ft (2014 design)	70,000 ft

Model: release, then motor on after 2.5 s; thrust falling linearly over 60 s (k = 0.50, fitted), all propellant burned; pull-up at 3 g from Mach 0.80 (fitted); thrust fitted to the apogee. Drag, pull-up, release speed and nose radius are estimates (!). Sources: memo references.

Responsible dept.: —	Technical reference: DOTDOC-TM-2026-001	Created by: D. Wolf	Approved by: D. Wolf	Scale:
Legal owner: **D. Wolf**		Document type: Explanatory drawing	Document status: Released	
		Title: **Air-launched spaceplane** — Flight profile, speed, load, heating		
Size: A3	Lang.: en	Date of issue: 2026-11-28	Identification number: **DOTDOC-TM-001-S3**	Rev.: **C** / Sheet: 3/3